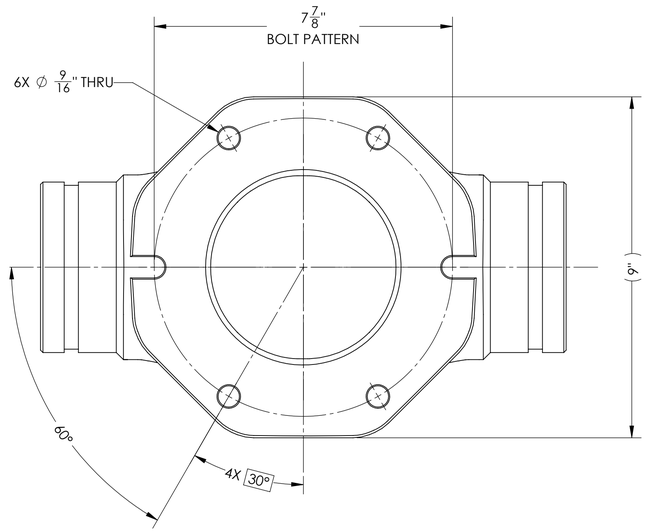

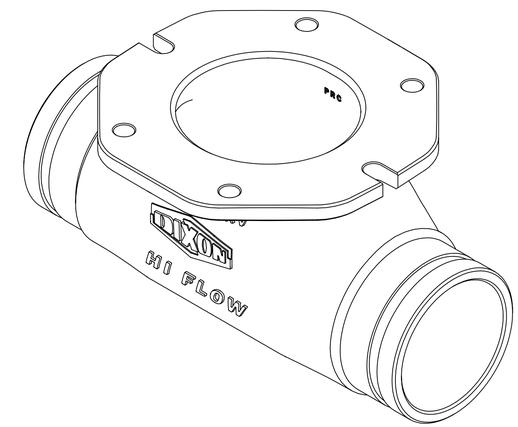

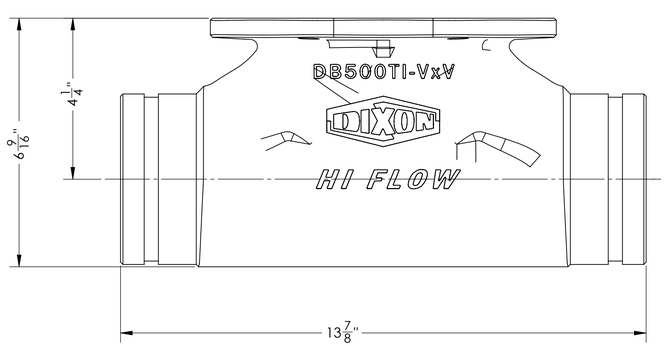

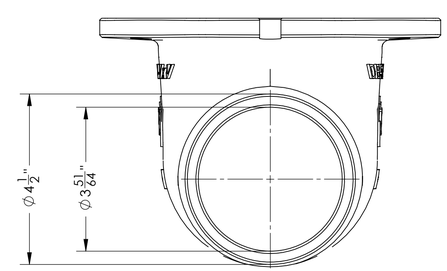

Dixon Bayco USA

Cincinnati, Ohio, U.S.A

A DVCC Inc. Company

THIS DRAWING IS CONFIDENTIAL PROPERTY OF DIXON BAYCO USA, A DIVISION OF DVCC AND IS SUBJECT TO RETURN ON DEMAND.

© COPYRIGHT 2000 DO NOT COPY.

DIM. TOLERANCES UNLESS SPECIFIED

INCHES .X +/- .030 MACHINE FRACTION +/- 1/64
.XX +/- .010 ROUGH CASTING +/- 1/32
.XXX +/- .005 SURF. FINISH 125 AA MAX
ANGLES +1/2°

TITLE

5 X 4 TEE FITTING
(CUSTOMER DRAWING)

SIZE	DRAWN BY	DWG NO.	REV
D	CMK	DB500TI-VxV-CST	0

SCALE 1:2 | DATE 10APR2015 | SHEET 1 OF 1